Southwestern College Organizational Chart

Business & Financial Affairs

October 2014

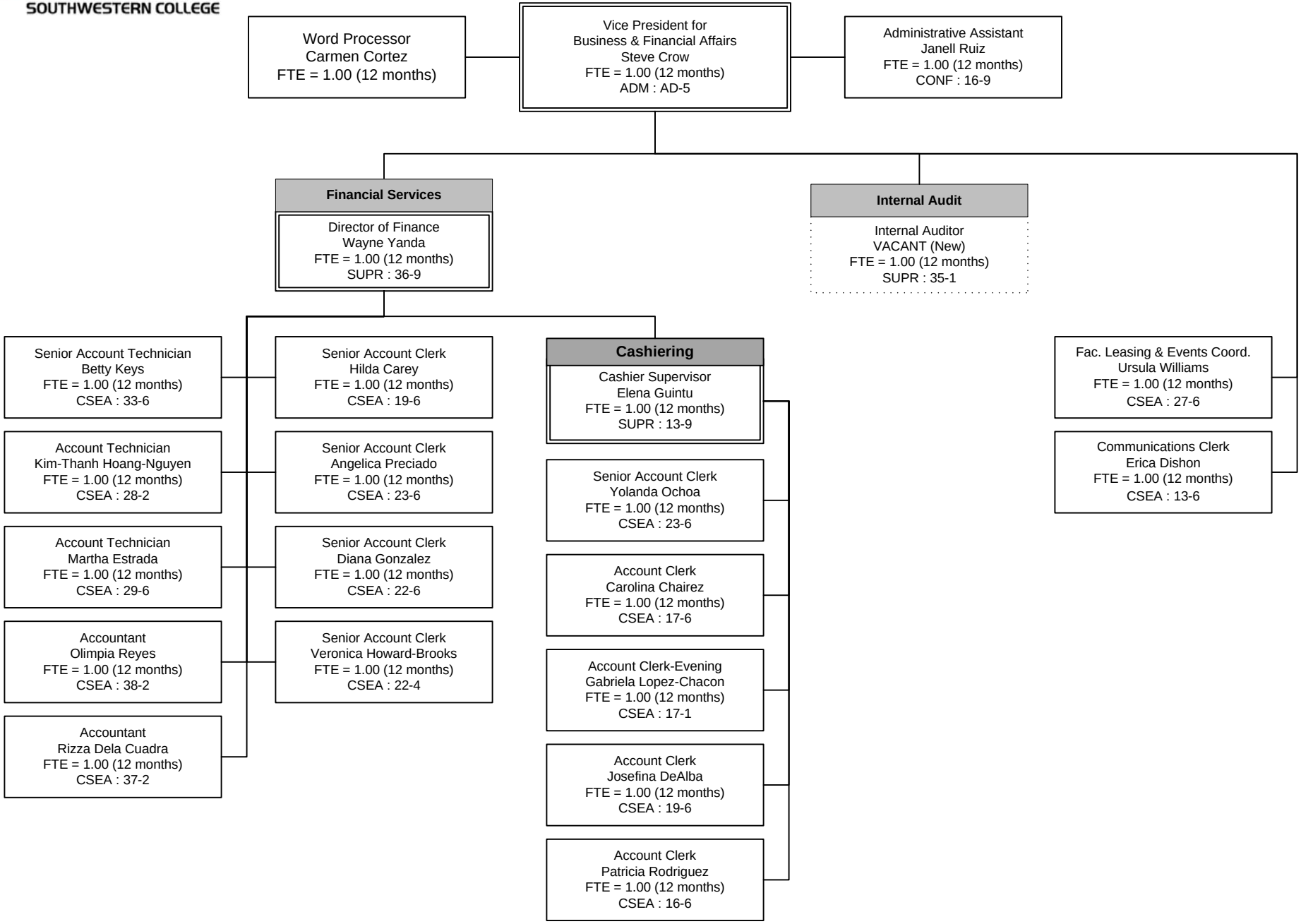

Southwestern College Organizational Chart

Procurement, Central Services & Risk Management

October 2014

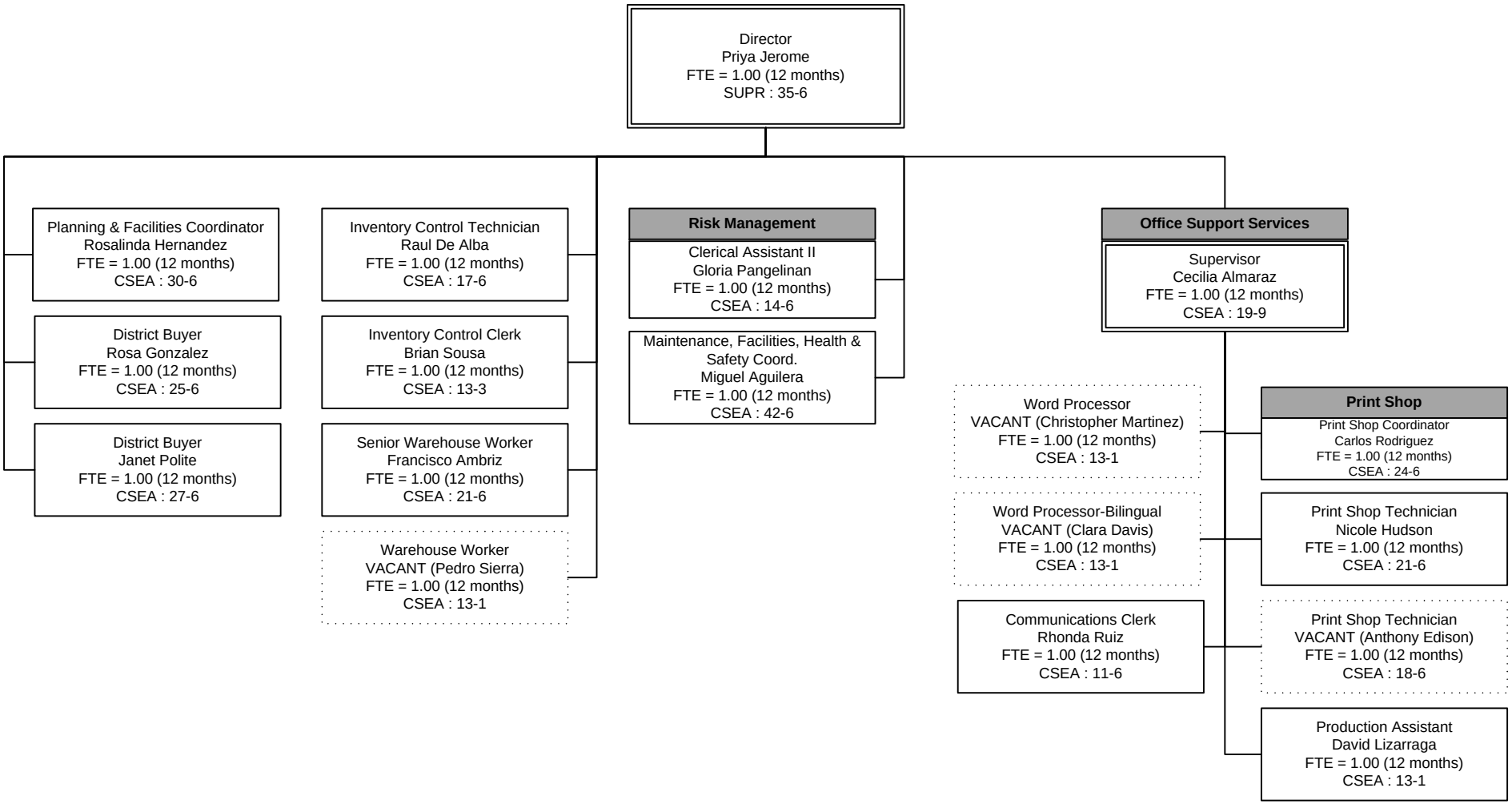

Southwestern College Organizational Chart

Bookstore

October 2014

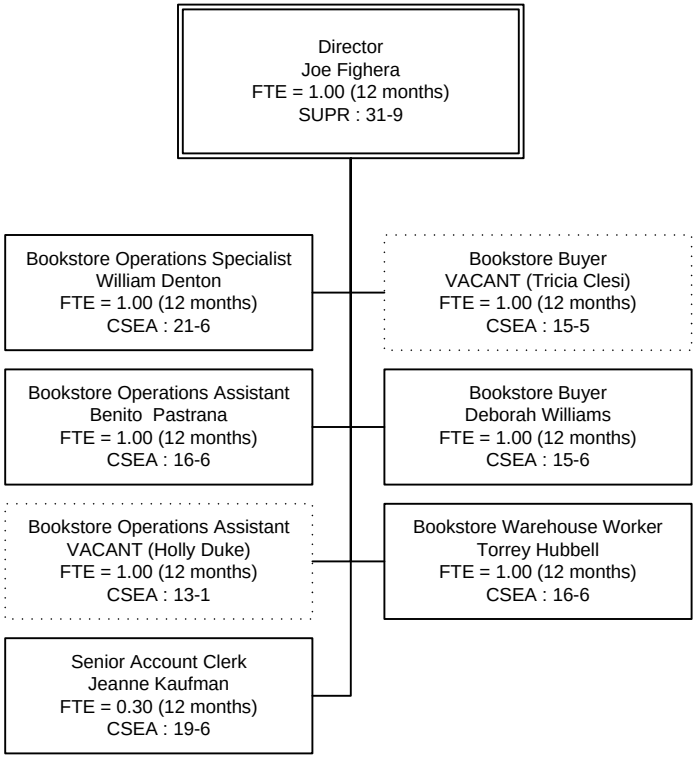

Southwestern College Organizational Chart

Food Services/Contracts Food Program Projects

October 2014

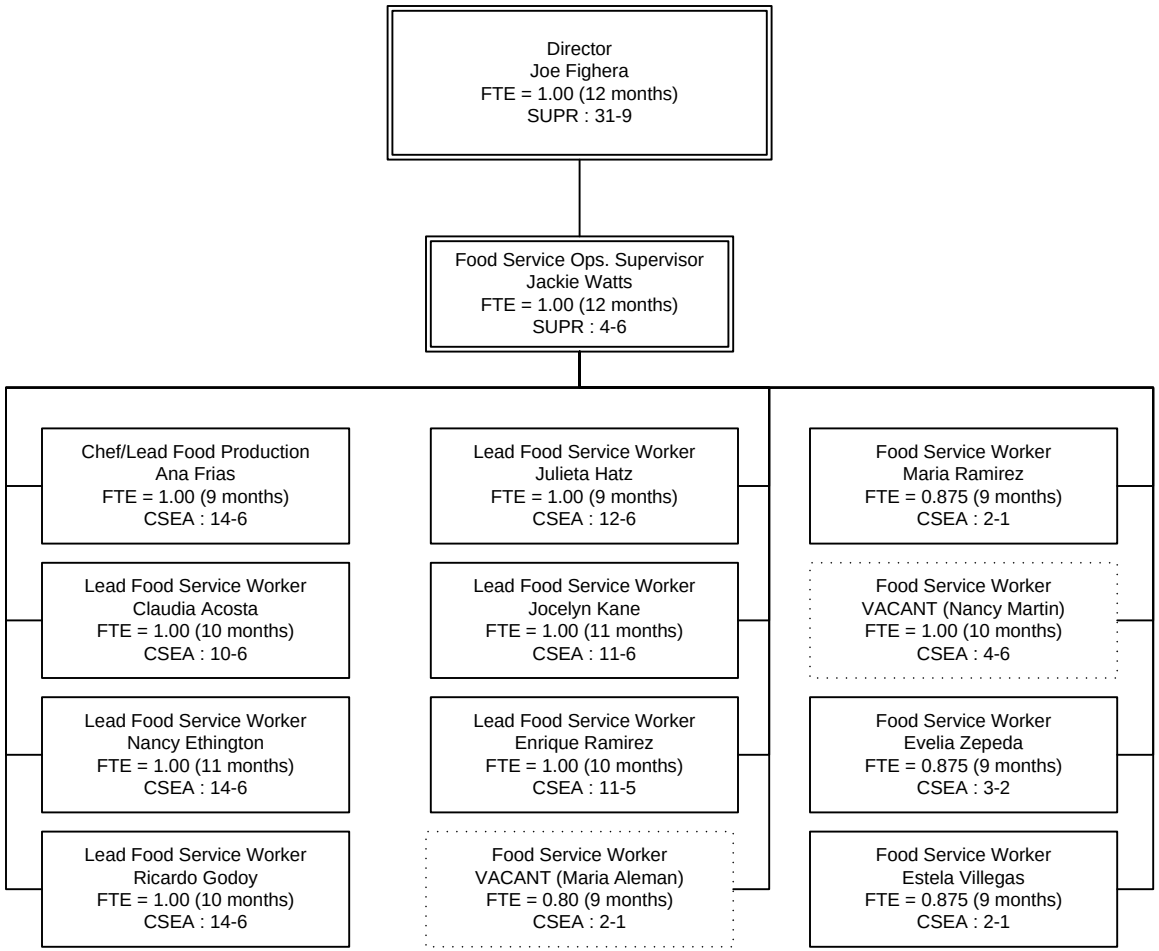

Southwestern College Organizational Chart

Facilities, Operations & Planning

October 2014

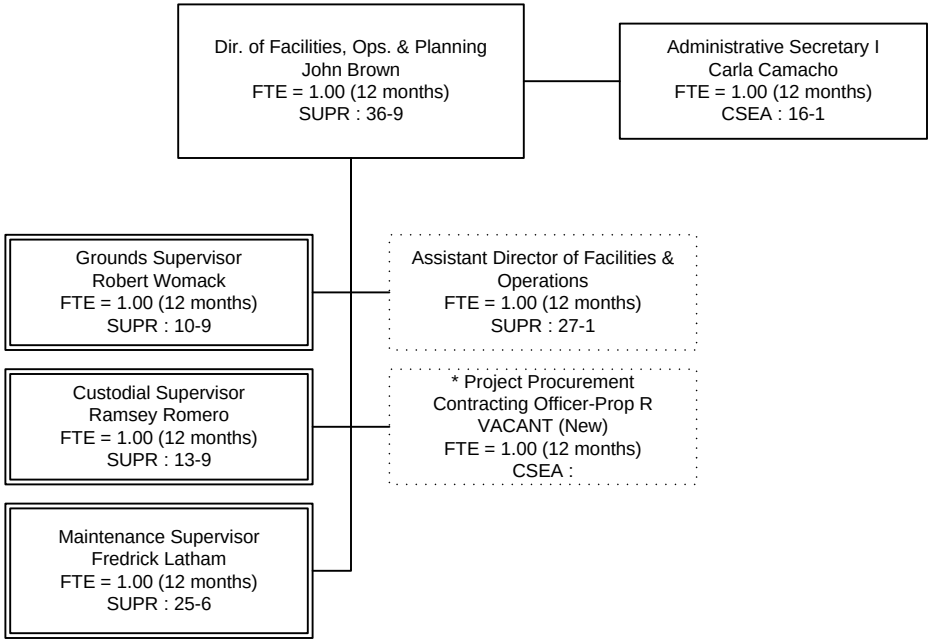

Southwestern College Organizational Chart

Maintenance

June 2013

Supervisor
Frederick Latham
FTE = 1.00 (12 months)
SUPR : 25-6

Construction Project Coordinator
Thomas Earley
FTE = 1.00 (12 months)
CSEA : 34-6

Carpenter/Cabinetmaker
William Brooks
FTE = 1.00 (12 months)
CSEA : 27-6

Lead Plumber
Tom Holst
FTE = 1.00 (12 months)
CSEA : 30-6

Plumber
Erik Duke
FTE = 1.00 (12 months)
CSEA : 24-3

Lead Electrician
Mark Schweigert
FTE = 1.00 (12 months)
CSEA : 29-6

Electrician
Federick Kanning
FTE = 1.00 (12 months)
CSEA : 25-6

Lead Painter
Thomas Katomski
FTE = 1.00 (12 months)
CSEA : 24-2

Painter
Paul Johnson
FTE = 1.00 (12 months)
CSEA : 21-6

Lead HVAC Mechanic
Carlos Pineda
FTE = 1.00 (12 months)
CSEA : 29-3

HVAC Mechanic
Samuel MacAraeg
FTE = 1.00 (12 months)
CSEA : 26-6

Maintenance Air Filter Technician
Richard Hettich
FTE = 1.00 (12 months)
CSEA: 20-6

Communications Energy Management Specialist
Simon Magbuhat
FTE = 1.00 (12 months)
CSEA : 31-3

Audio Visual Repair Technician
David Walwick
FTE = 1.00 (12 months)
CSEA : 27-6

Lead Vehicle & Equipment Mechanic
Richard Deyoung
FTE = 1.00 (12 months)
CSEA : 32-6

Vehicle & Equipment Mechanic
Travis Rayburn
FTE = 1.00 (12 months)
CSEA : 24-1

Pool Maintenance Technician
Froilan Aquino
FTE = 1.00 (12 months)
CSEA : 23-6

Custodian
Burk Romero
FTE = 1.00 (12 months)
CSEA : 10-6

Clerical Assistant II
Isabel Alvarez
FTE = 1.00 (12 months)
CSEA : 11-6

*Project Funded positions

Southwestern College Organizational Chart

Grounds

July 2014

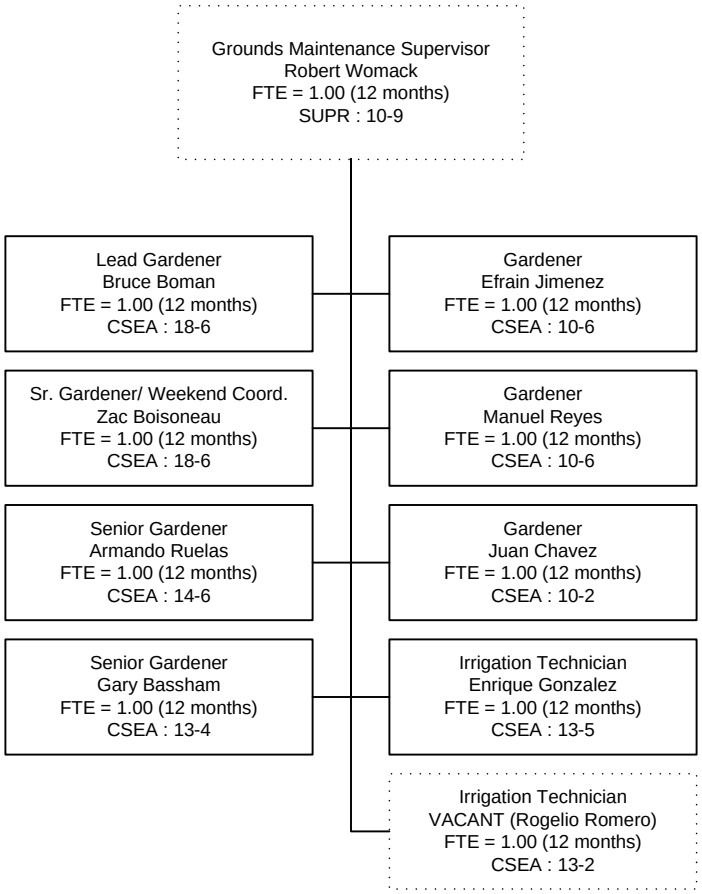

Southwestern College Organizational Chart

Custodial

October 2014

Custodial Supervisor
Ramsey Romero
FTE = 1.00 (12 months)
SUPR : 13-9

Lead Custodian
Ruben Castillo
FTE = 1.00 (12 months)
CSEA : 17-6

Custodian
Richard Allen Jr.
FTE = 1.00 (12 months)
CSEA : 12-6

Custodian
Carlo Sanchez
FTE = 1.00 (12 months)
CSEA : 12-1

Custodian
Carlos Berrios
FTE = 1.00 (12 months)
CSEA : 12-6

Custodian
Gregory Brownstead
FTE = 1.00 (12 months)
CSEA : 13-6

Custodian
Federico Buch
FTE = 1.00 (12 months)
CSEA : 13-6

Custodian
Rolando Cadua
FTE = 1.00 (12 months)
CSEA : 12-6

Custodian
VACANT (Carlos Calderon)
FTE = 1.00 (12 months)
CSEA : 13-6

Custodian
Matronillo Carbonilla
FTE = 1.00 (12 months)
CSEA : 15-6

Custodian
Roderick Curry
FTE = 1.00 (12 months)
CSEA : 12-4

Custodian
Vicente Taijeron
FTE = 1.00 (12 months)

Custodian
Mark Gutierrez
FTE = 1.00 (12 months)
CSEA : 12-6

Custodian
Gutierrez-Gamino, Jose
FTE = 1.00 (12 months)
CSEA : 12-1

Custodian
VACANT (Sergio Juarez)
FTE = 1.00 (12 months)
CSEA : 12-6

Custodian
Kennedy Lugue
FTE = 1.00 (12 months)
CSEA : 12-6

Custodian
Lance Kannegiesser
FTE = 1.00 (12 months)
CSEA : 12-6

Custodian
Jorge Leon
FTE = 1.00 (12 months)
CSEA : 14-6

Custodian
Eric Matos
FTE = 1.00 (12 months)
CSEA : 12-6

Custodian
Antonio Alvarez
FTE = 1.00 (12 months)
CSEA : 12-3

Custodian
Luis Sandoval
FTE = 1.00 (12 months)
CSEA : 14-6

Custodian
Thaao Streeter
FTE = 1.00 (12 months)
CSEA : 12-4

Custodian
Santiago Vilaboy
FTE = 1.00 (12 months)
CSEA : 12-6

Custodian
Joshua Warren
FTE = 1.00 (12 months)
CSEA : 12-5

Custodian
William Woodward
FTE = 1.00 (12 months)
CSEA : 12-6

Custodian
George Ybarra
FTE = 1.00 (12 months)
CSEA : 12-6

Custodian
Mario Campos
FTE = 0.475 (12 months)
CSEA : 10-1